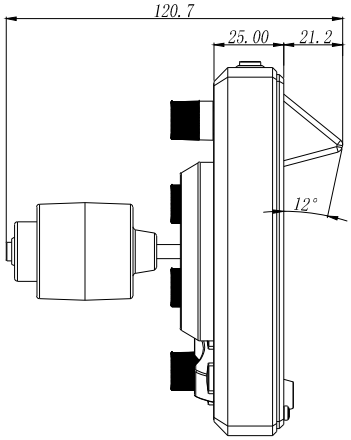
120.7
25.00
21.2
12°

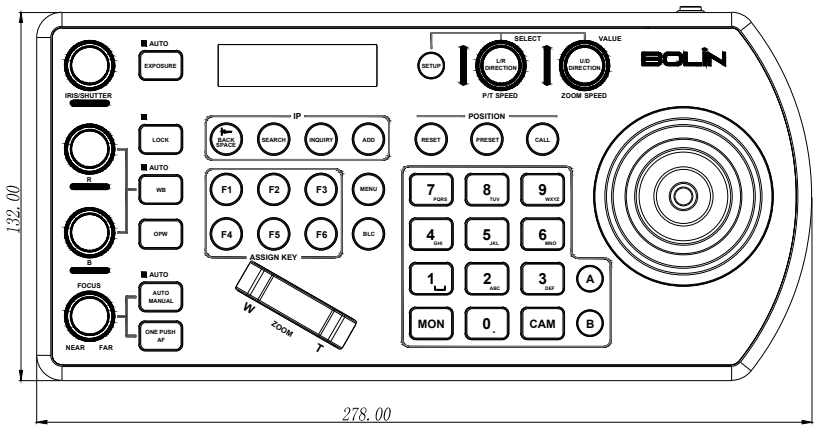
AUTO
EXPOSURE
IRIS/SHUTTER
SELECT
VALUE
SETUP
L/R DIRECTION
U/D DIRECTION
P/T SPEED
ZOOM SPEED
BOLIN
LOCK
IP
BACK SPACE
SEARCH
INQUIRY
ADD
POSITION
RESET
PRESET
CALL
R
AUTO
WB
OPW
F1
F2
F3
MENU
F4
F5
F6
BLC
B
ASSIGN KEY
FOCUS
AUTO
AUTO MANUAL
ONE PUSH AF
NEAR
FAR
W
ZOOM
T
7 PQRS
8 TUV
9 WXYZ
4 GHI
5 JKL
6 MNO
1
2 ABC
3 DEF
A
MON
0
CAM
B
132.00
278.00

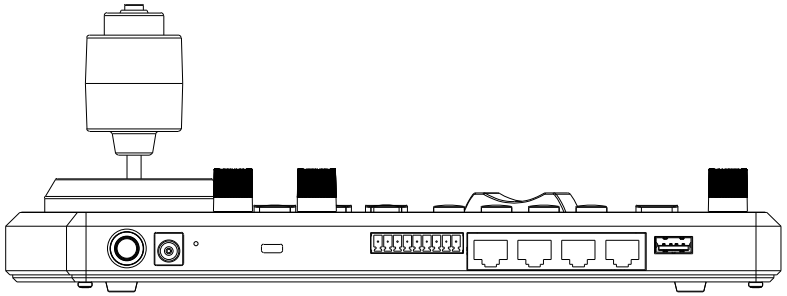

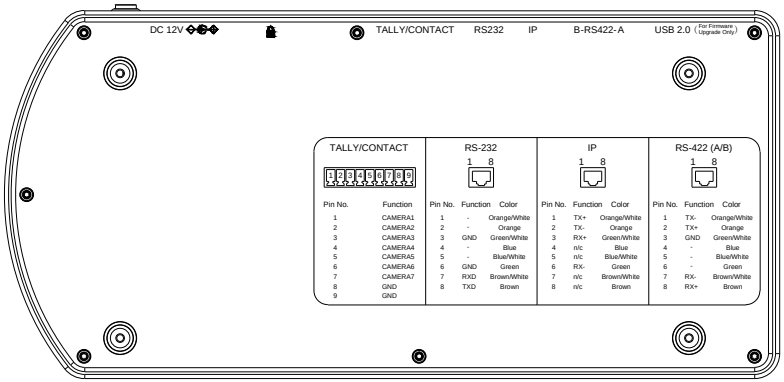
DC 12V
TALLY/CONTACT
RS232
IP
B-RS422-A
USB 2.0
(For Firmware Upgrade Only)
TALLY/CONTACT
1 2 3 4 5 6 7 8 9
Pin No. Function
1 CAMERA1
2 CAMERA2
3 CAMERA3
4 CAMERA4
5 CAMERA5
6 CAMERA6
7 CAMERA7
8 GND
9 GND
RS-232
1 8
Pin No. Function Color
1 - Orange/White
2 - Orange
3 GND Green/White
4 - Blue
5 - Blue/White
6 GND Green
7 RXD Brown/White
8 TXD Brown
IP
1 8
Pin No. Function Color
1 TX+ Orange/White
2 TX- Orange
3 RX+ Green/White
4 n/c Blue
5 n/c Blue/White
6 RX- Green
7 n/c Brown/White
8 n/c Brown
RS-422 (A/B)
1 8
Pin No. Function Color
1 TX- Orange/White
2 TX+ Orange
3 GND Green/White
4 - Blue
5 - Blue/White
6 - Green
7 RX- Brown/White
8 RX+ Brown